62

S

WAS P-73-6101

1. PARTS COMPLY WITH AMP SOLDERABILITY SPEC. NO. 109-11-3

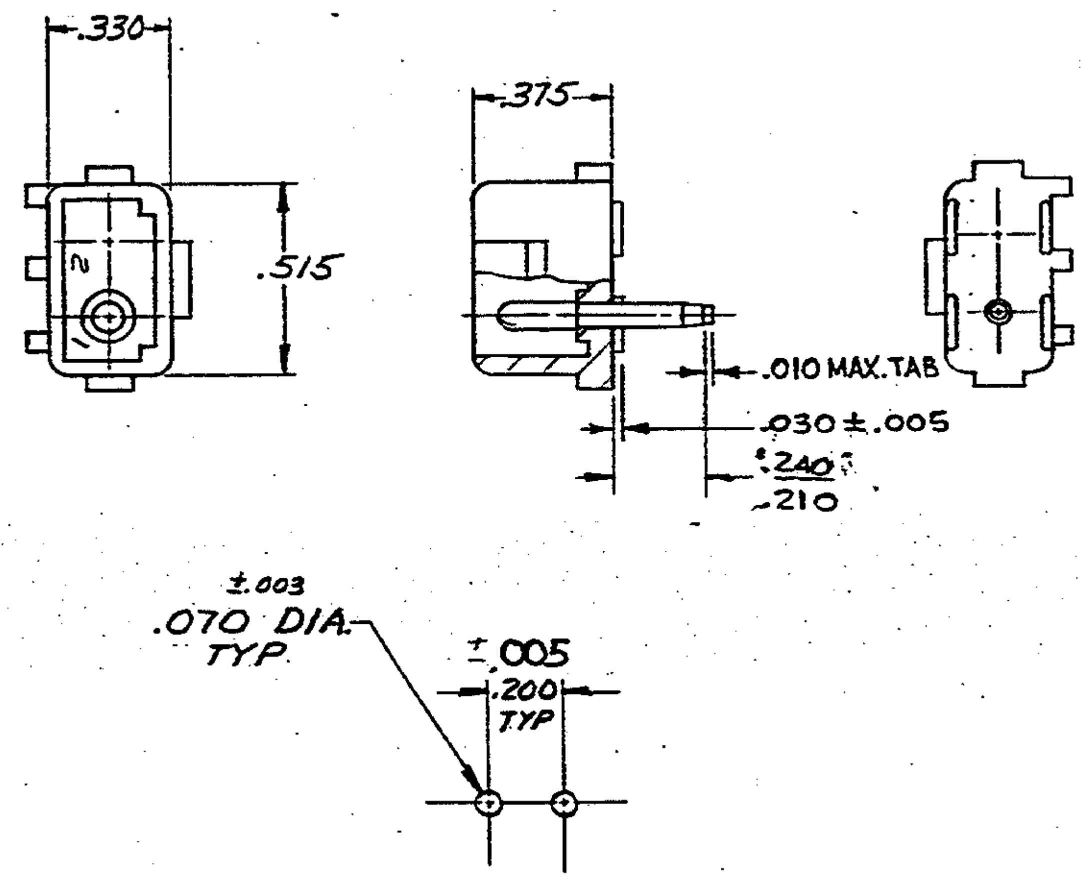

RECOMMENDED LAYOUT FOR
.125 THICK P.C. BOARD

ASSEMBLY NO.	HSG MATL & COLOR	PIN MATL & FINISH
350540-1	NYLON - NATURAL	COPPER ALLOY PRE-TIN

Unpublished copy not to be reproduced nor published without written permission of AMP Incorporated

L	OBSOLETE -2 PER ECN CM-2709	RS	6-26-92
K	OBSOLETE 1-1, 2-1, 3-1, 4-1, 5-1, 6-1, 7-1, 8-1, 9-1, 1-2, 2-2, 3-2, 4-2, 5-2, 6-2, 7-2, 8-2, 9-2 CM-473	KW / RS	4-18-86

LTR	REVISION RECORD	DR	CHK	DATE
J1	RESTORED	BKD	RS	4-15-85
J	REV. PER M-7375	SJ	QM	8-29-83
H	.250 Coax WAS .250 REF, M-7255	MS	D.H.	3-11-83
G	ADDED NOTE 2, M-6694	MSF	D.H	11-25-81
F	REMOVED STICKER, M-6543	MSF	D.H	8-17-81
E	REV. TAIL LENGTH M-5334	MSF	D.H	6-24-79
D	REVISED M-4161	MF	D.H	3-7-77
C	ECN M-3871	BRW	D.H.	9-76
B	ECN M-3452	GY	REF	7/18/74
A	ECN M-2156	ER		

NUMBER 350540

REQUIRED PER ASSEMBLY

DESCRIPTION

© 1973 BY AMP INCORPORATED. ALL RIGHTS RESERVED. AMP PRODUCTS COVERED BY PATENTS AND/OR PATENTS PENDING.

CUSTOMER COPY
REFERENCE ONLY

DR G. Edmon 3-29-73
CHK EM Falkenstine 4/9/73
DE J. Henkle 4-10-73
APP J. Henkle 4-10-73

MATERIAL AND FINISH: SEE TABLE

AMP INCORPORATED HARRISBURG, PENNA

CLASS .084 DIA. PIN
TYPE POSITIVE LOCK

WIRE RANGE INSULATION — — —
TOLERANCE EXCEPT AS NOTED ±.015 ±1° 0'
SCALE —
LOC CM B
NO 350540
RFV L

NAME 2 CIRCUIT MATE-N-LOK P.C. BOARD HEADER

DIMENSIONS IN INCHES. DO NOT SCALE PRINT.

PRINT/DIST 53

AMP 1253 REV 11/65